VISTA

Ambienti

eurocryor
eptarefrigeration

PURO STILE ITALIANO

Product categories

Sandwiches

Drinks

Technical features

Off-cycle defrost

Eletric defrost

Ventilated

Remote condensing unit

LED lighting

Accessories

- ○ REFRIGERATED STORAGE CL
- ○ REFRIGERATED STORAGE FL
- ○ PASTRY DRAWER
- ○ FRONT BASKET / BOTTLE DISPLAY RACK
- ○ PLEXIGLASS CLOSURE ON RAIL
- ○ LOW MOBILE DIVIDER
- ○ ANTI-MIST FRONT BAFFLE
- ○ HOOKSREAR SUPPORT*
- ○ SHELF
- ○ STEPPED DESK
- ○ SLIDING MACHINE/SCALE HOLDER
- ○ ROTATING PLATE
- ○ BASKET RAIL WITH THREE TUBES
- ○ PAPER HOLDER
- ○ 360mm BACK-SHELF PAPER HOLDER
- ○ DOUBLE PAPER HOLDER
- ○ KNIVES HOLDER
- ○ PAPER ROLL HOLDER
- ○ SCALE HOLDER ON BRACKET
- ● PRICE TICKET STRIP
- ○ ELECTRICAL SOCKETS
- ○ POLYETHYLENE CUTTING BOARD
- ○ NIGHT BLINDS
- ● FLOOR TUBULAR BUMPER RAIL
- ● BUMPER RAIL
- ● TUBULAR BUMPER RAIL ON CANOPY
- ○ G-N PANS*
- ○ FISH TANKS
- ○ ICE-CREAM SCOOP CLEANER
- ○ ICE-CREAM TRAYS

*supplied separately

VISTA

Ambienti

eurocryor
eptarefrigeration
PURO STILE ITALIANO

Cross Sections

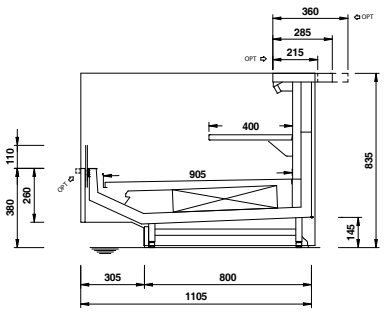

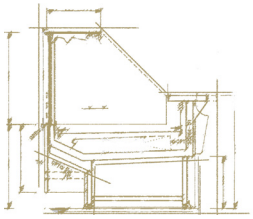

Fully customized solutions: design flexibility of shapes & sizes.
Our team is at complete disposal for evaluating any different solutions in order to fulfill all your needs. Please write at sales@eurocryor.it